1962

Lincoln Continental

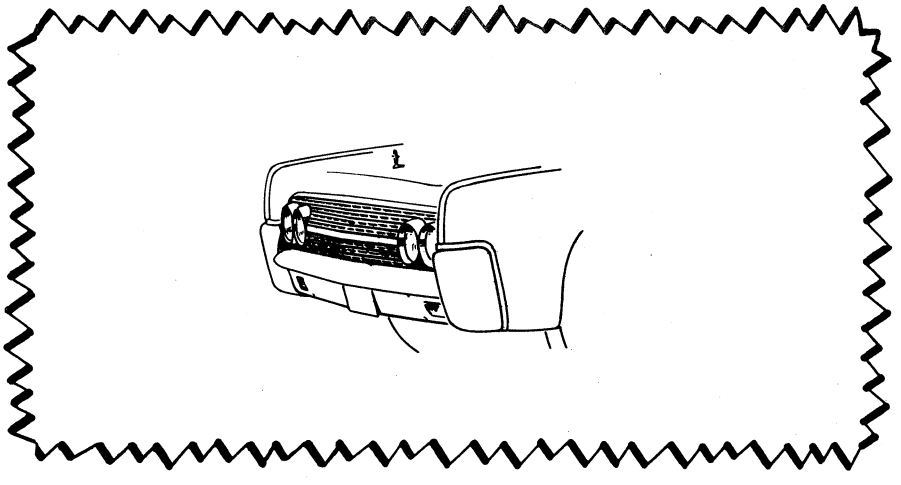

WIRING DIAGRAM MANUAL

1962

LINCOLN CONTINENTAL

WIRING DIAGRAM

MANUAL

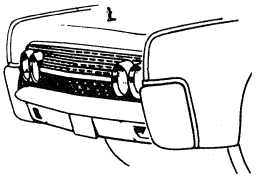

FIRING ORDER

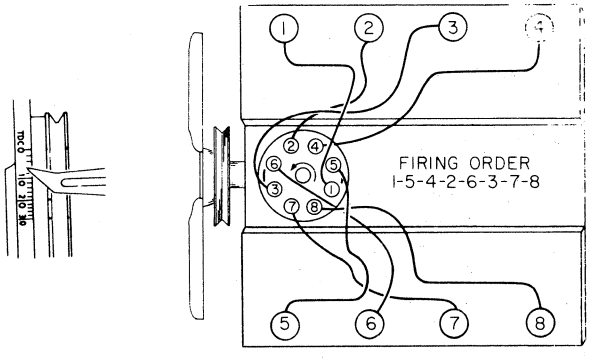

FUSE BLOCK

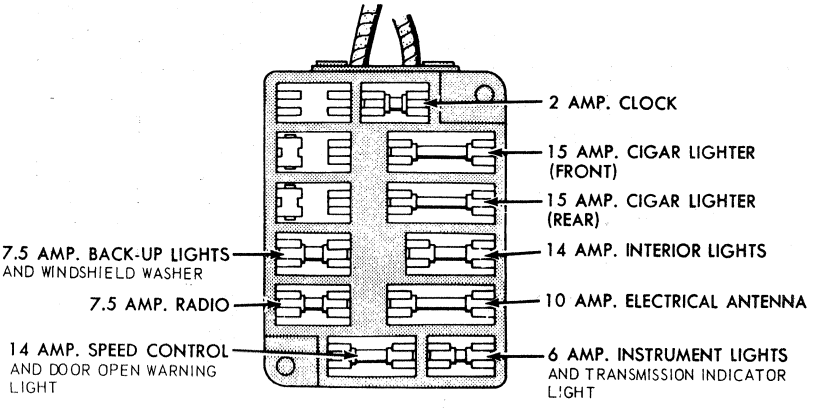

FUSES

HEADLAMPS	
LOW BEAM	4002; 50/37.5 W
HIGH BEAM	4001; 37.5 W
TURN SIGNALS, PARKING, STOP, TAIL	1034; 32/4 CB
BACK-UP LAMPS	1141; 21 CP
LICENSE PLATE LAMP	67; 4 CP
INDICATOR LAMPS	57; 2 CP
IGNITION SWITCH, GLOVE COMPARTMENT	57; 2 CP
RADIO DIAL	1893; 1.9 CP
COURTESY LAMPS	89; 6 CP
DOME LAMPS	89; 6 CP
CLOCK	1816; 2.6 CP
ASH RECEPTACLES	1445; 1.5 CP

LIGHT BULBS

HEADLAMPS	18 Amp. CB
REAR LAMPS, PARK, STOP, LICENSE PLATE, CONVERTIBLE TOP LOCK MOTOR	12 Amp. CB
POWER WINDOWS	15 Amp. CB
A/C AND HEATER BLOWERS	20 Amp. CB
A/C AND HEATER SERVO	6 Amp. CB
POWER SEATS	30 Amp. CB
TURN SIGNALS	14 Amp. Fuse
CIGAR LIGHTER	15 Amp. Fuse
BACK-UP LAMPS, COURTESY & DOME	7.5 Amp. Fuse
CLOCK	1 Amp. Fuse
ELECTRIC ANTENNA, WINDSHIELD WIPER VACUUM PUMP	10 Amp. Fuse
INTERIOR LAMPS	14 Amp. Fuse
RADIO, STOP, TURN SIGNALS	7.5 Amp. Fuse

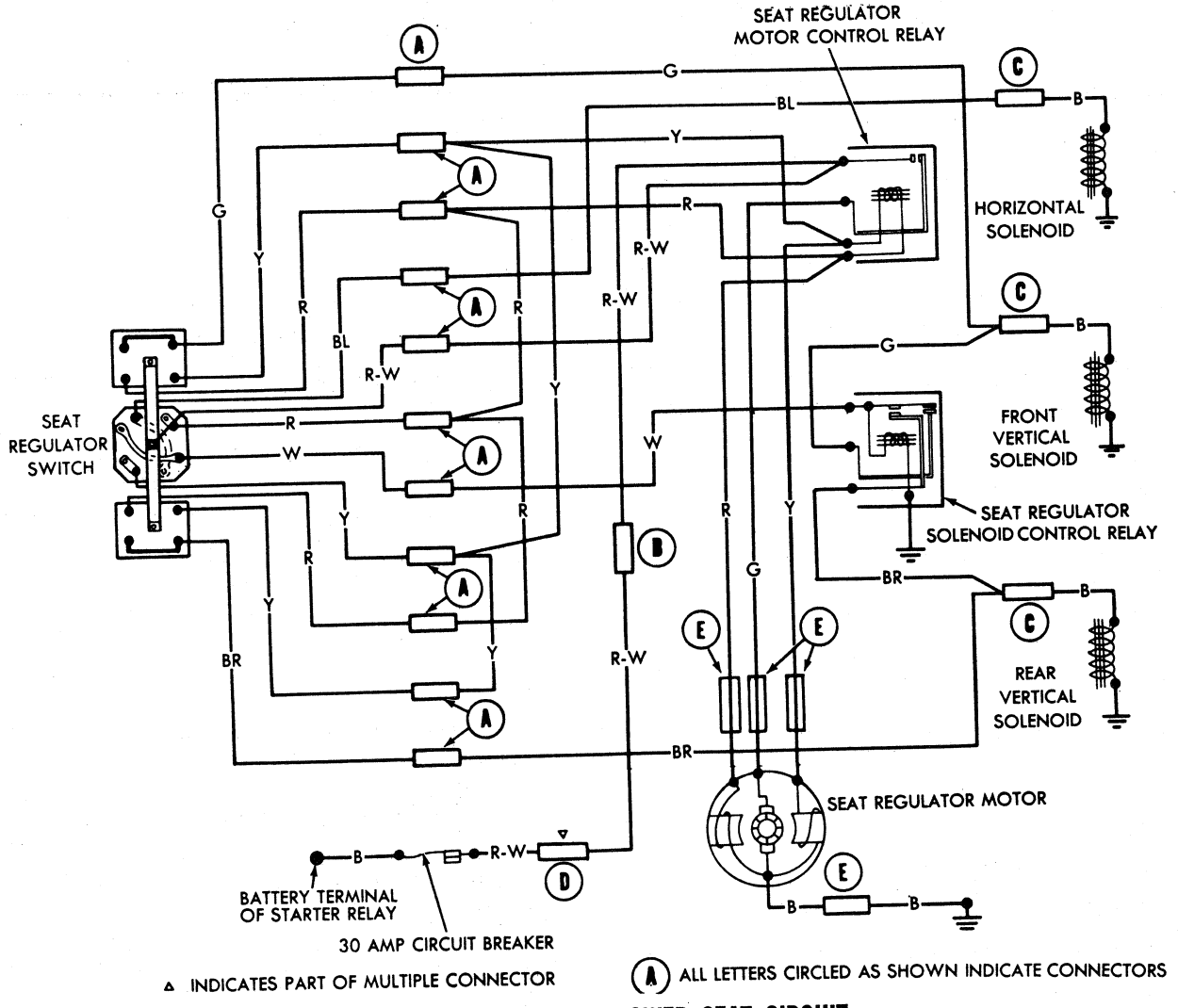

△ INDICATES PART OF MULTIPLE CONNECTOR

(A) ALL LETTERS CIRCLED AS SHOWN INDICATE CONNECTORS

1962 SIX WAY POWER SEAT CIRCUIT

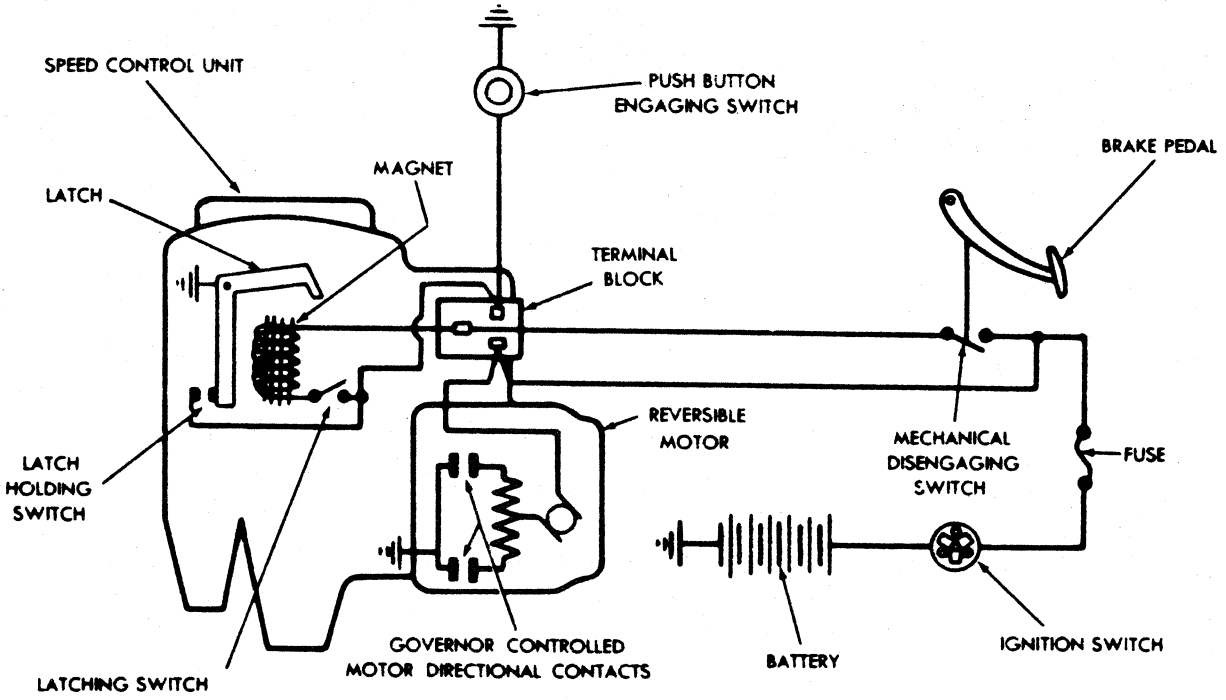

Speed Control . . 1962

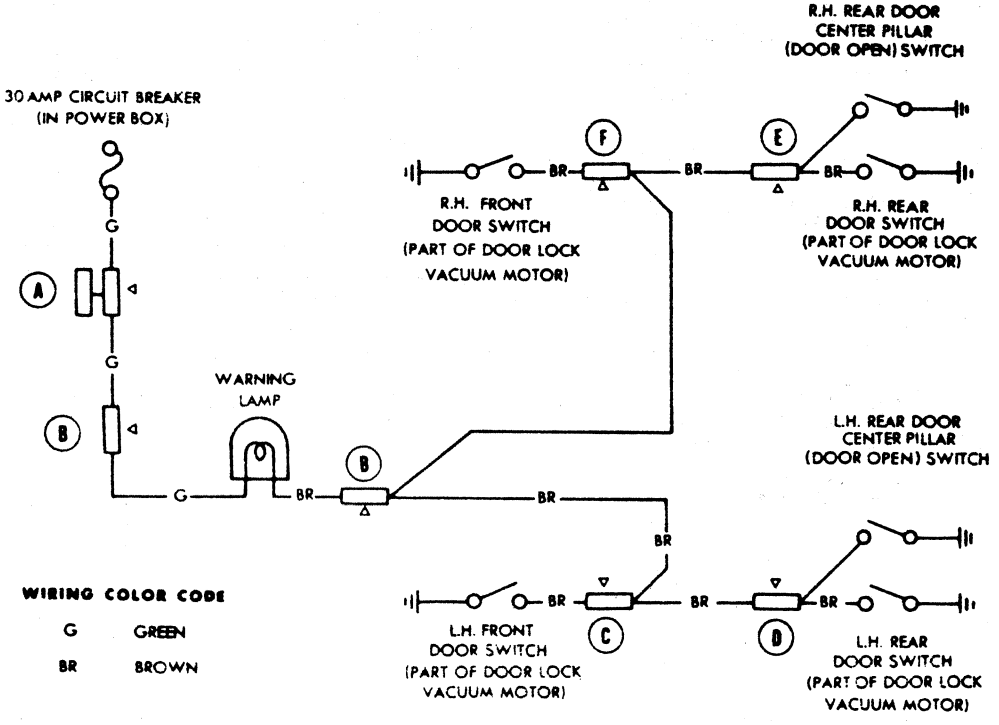

(A) ALL LETTERS CIRCLED AS SHOWN INDICATE CONNECTORS

△ INDICATES PART OF MULTIPLE CONNECTOR

Door Lock Warning Circuit . . 1962

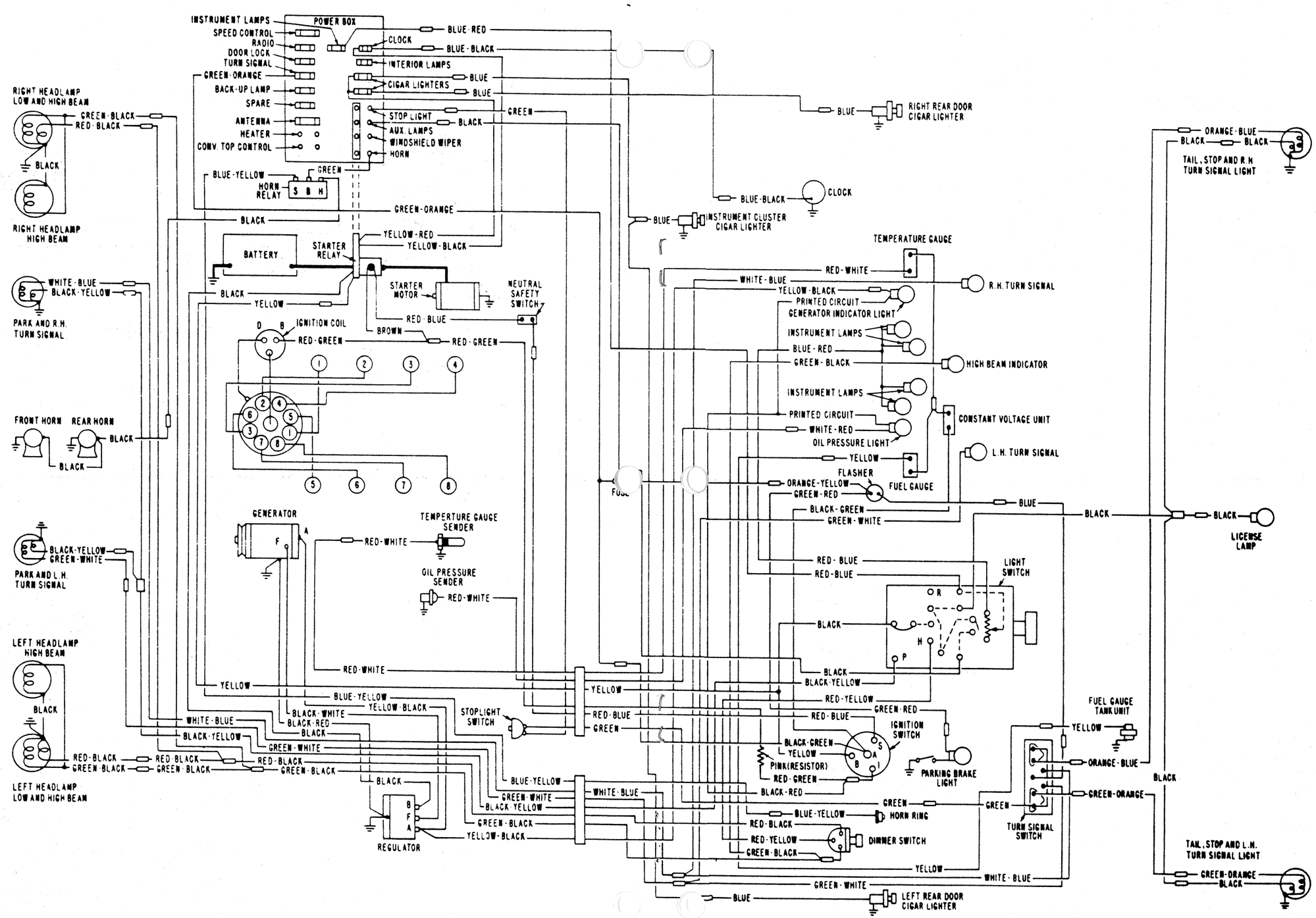

Chassis Wiring . . 1962

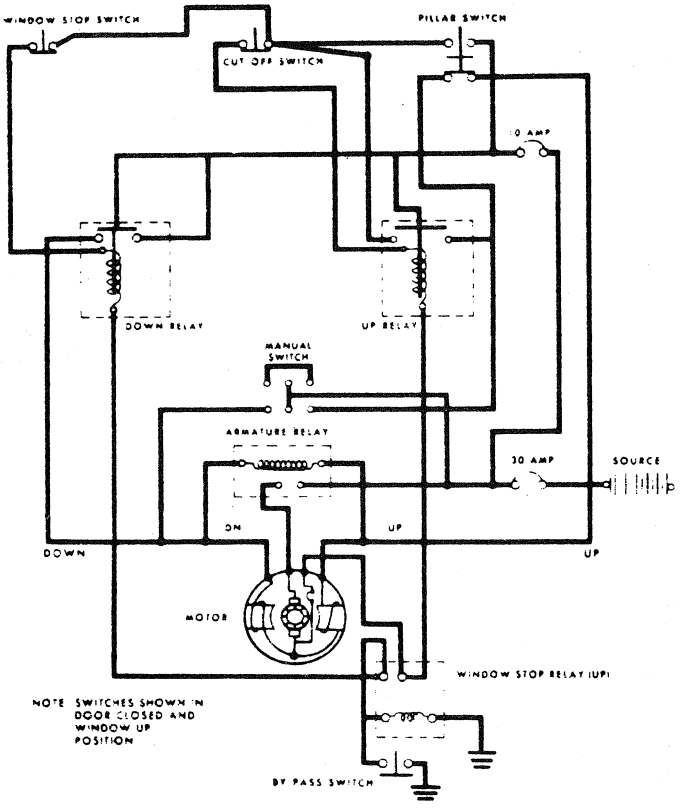

Automatic Rear Door Window Circuits . . 1962 Convertible (For front windows see power windows . . 1962 sedans)

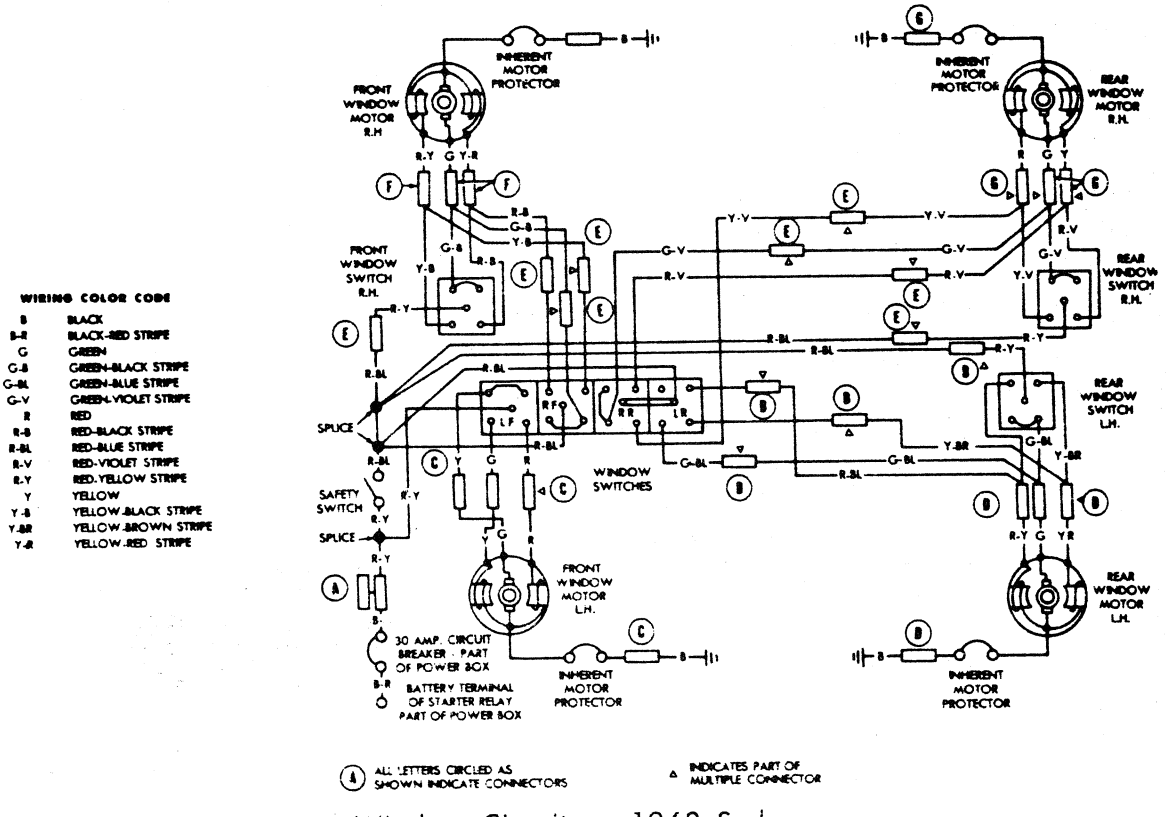

Power Window Circuit . . 1962 Sedans (Front window circuits apply to convertible)

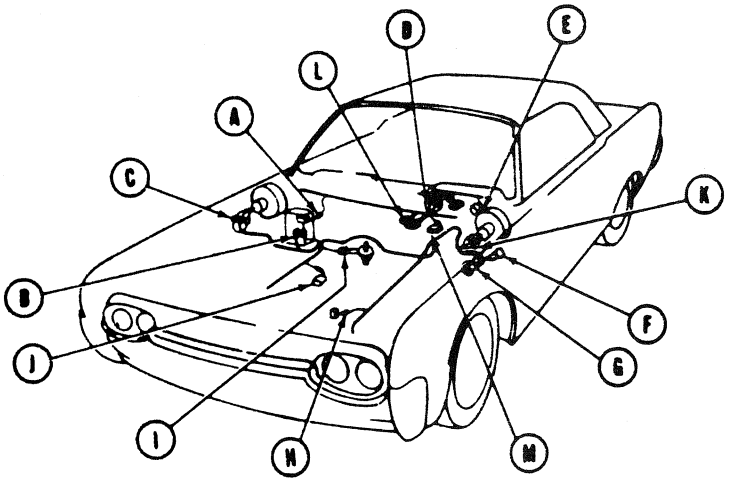

WIRING COLOR CODE

O	ORANGE
BL	BLUE
R	RED
W	WHITE
R-BL	RED-BLUE STRIPE
G-O	GREEN-ORANGE STRIPE
R-B	RED-BLACK STRIPE
O-B	ORANGE-BLACK STRIPE
V	VIOLET
B-G	BLACK-GREEN STRIPE
BR-G	BROWN-GREEN STRIPE
BR-O	BROWN-ORANGE STRIPE
BR-V	BROWN-VIOLET STRIPE
B-W	BLACK-WHITE STRIPE
BR	BROWN
B	BLACK
B-R	BLACK-RED STRIPE

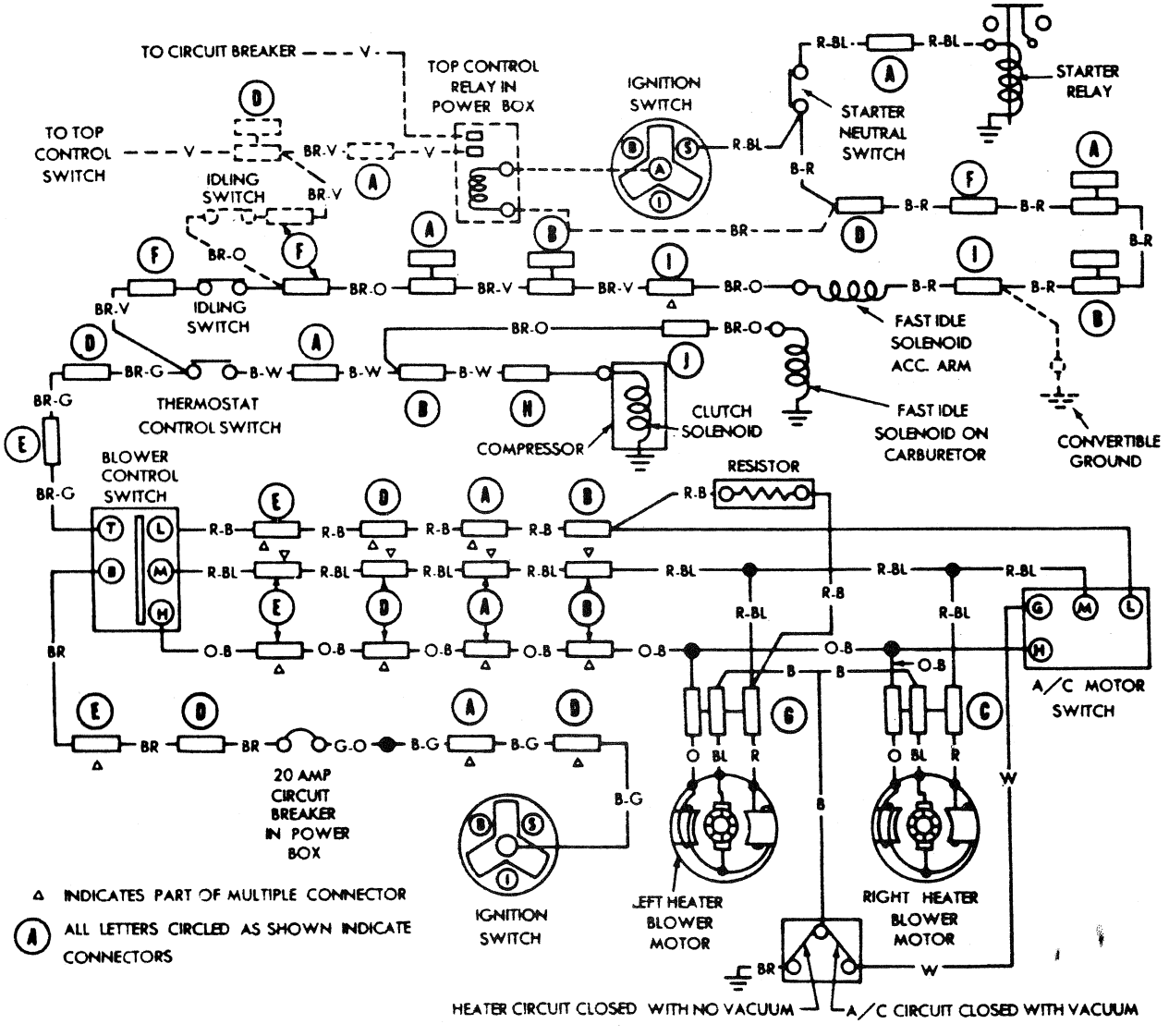

△ INDICATES PART OF MULTIPLE CONNECTOR

(A) ALL LETTERS CIRCLED AS SHOWN INDICATE CONNECTORS

Air Conditioner & Heater Circuit . . 1962

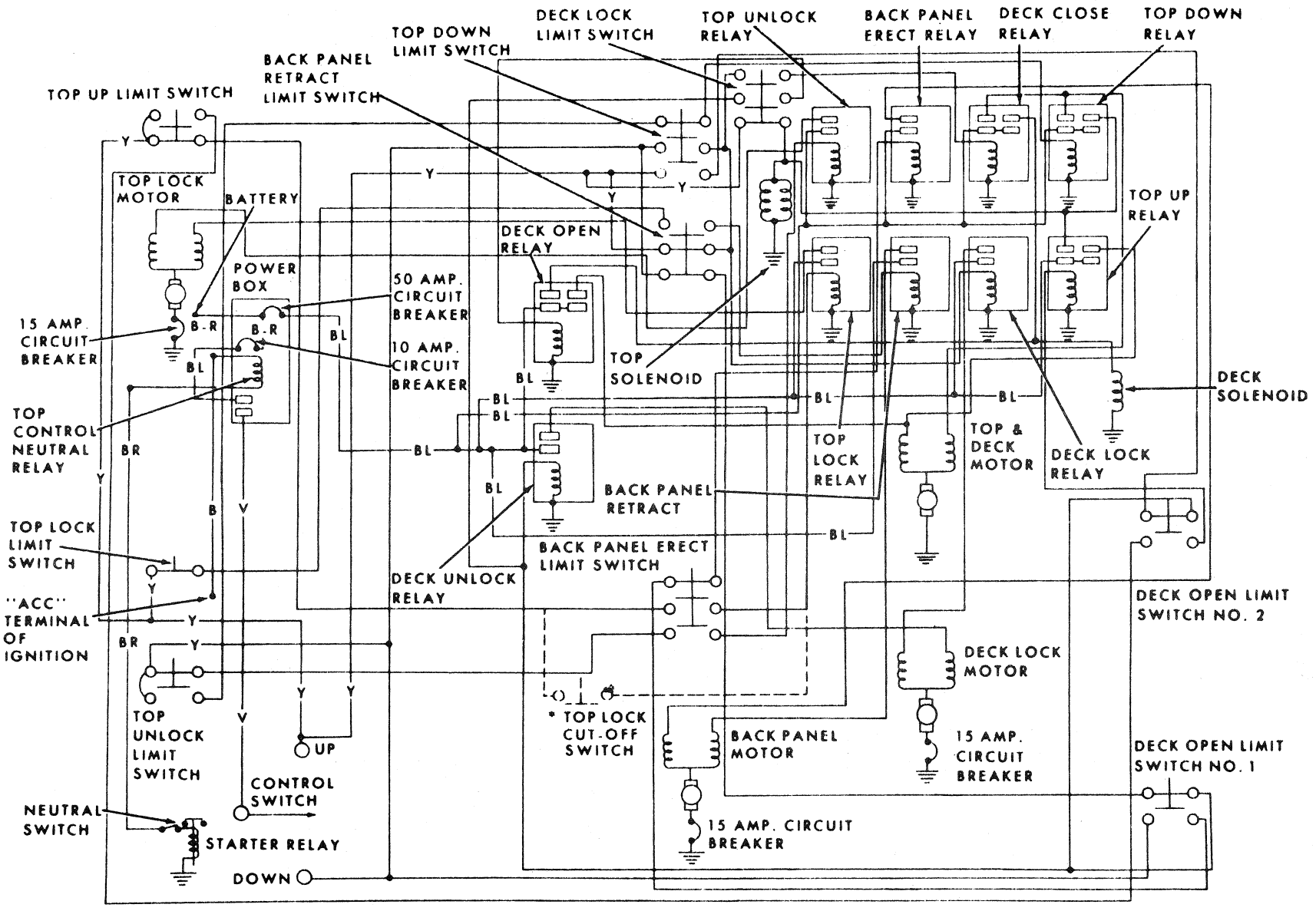

*WHEN TOP LOCK CUT-OFF SWITCH IS INSTALLED IN CIRCUIT, THE 6 TERMINAL BACK PANEL ERECT LIMIT SWITCH IS REPLACED BY A 4 TERMINAL SWITCH

Convertible Top Circuit . . 1962