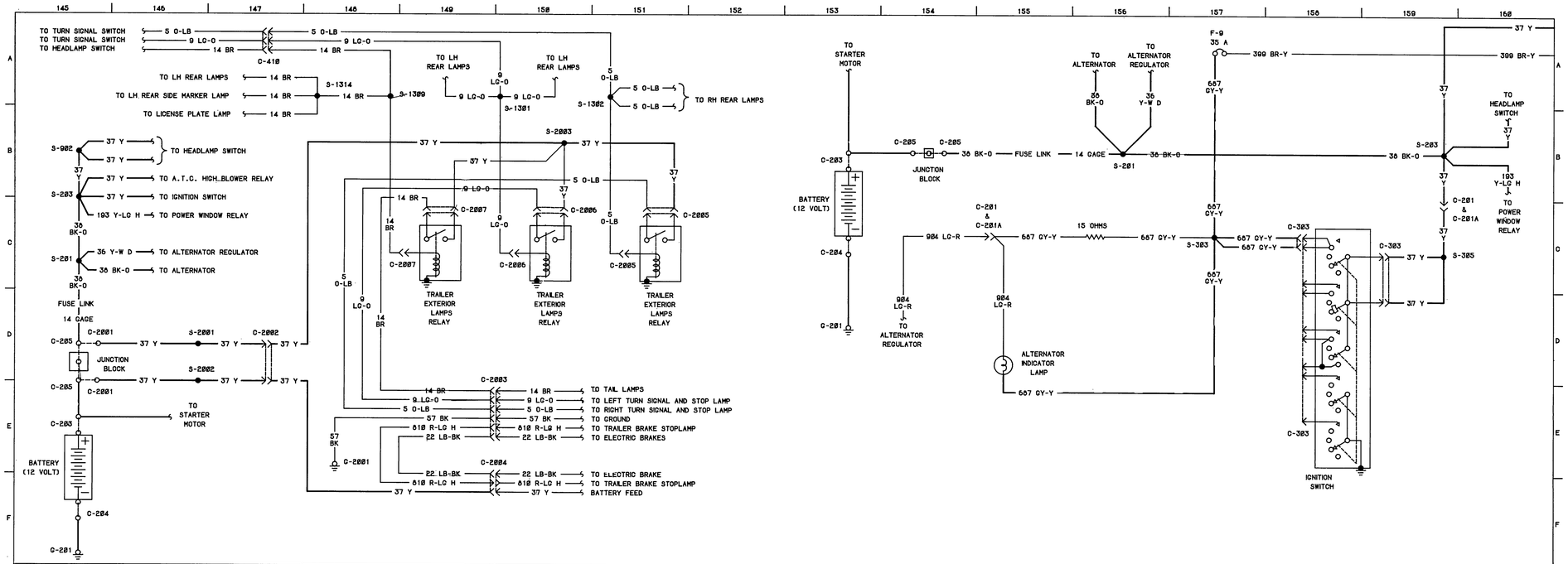

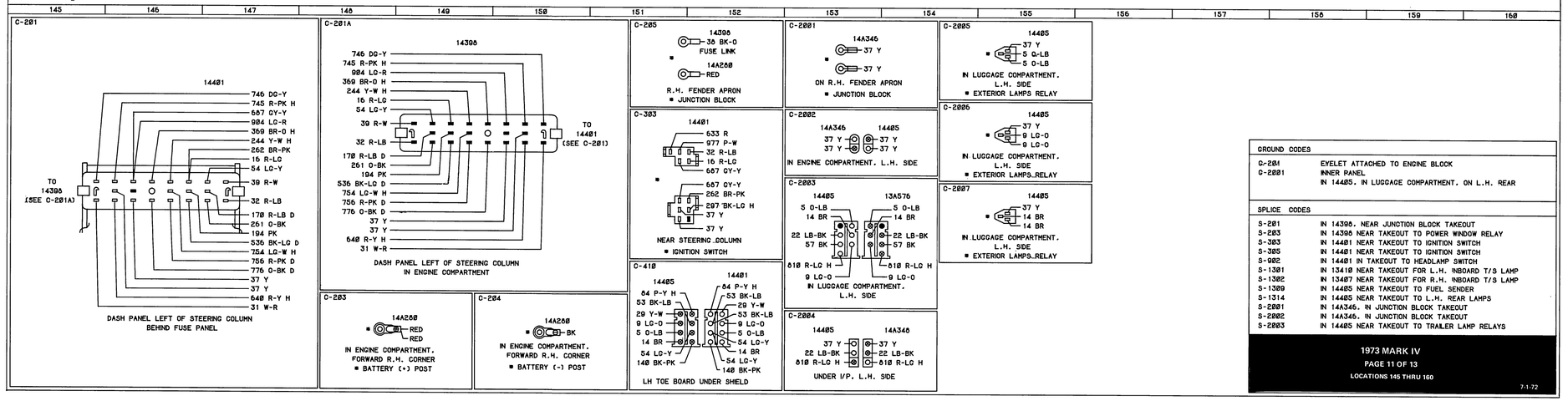

GROUND CODES	
C-201	EYELET ATTACHED TO ENGINE BLOCK
C-2001	INNER PANEL IN 14405. IN LUGGAGE COMPARTMENT. ON L.H. REAR

SPLICE CODES	
S-201	IN 14395. NEAR JUNCTION BLOCK TAKEOUT
S-203	IN 14398 NEAR TAKEOUT TO POWER WINDOW RELAY
S-303	IN 14401 NEAR TAKEOUT TO IGNITION SWITCH
S-305	IN 14401 NEAR TAKEOUT TO IGNITION SWITCH
S-902	IN 14401 IN TAKEOUT TO HEADLAMP SWITCH
S-1301	IN 13410 NEAR TAKEOUT FOR L.H. INBOARD T/S LAMP
S-1302	IN 13407 NEAR TAKEOUT FOR R.H. INBOARD T/S LAMP
S-1309	IN 14405 NEAR TAKEOUT TO FUEL SENDER
S-1314	IN 14405 NEAR TAKEOUT TO L.H. REAR LAMPS
S-2001	IN 14A346. IN JUNCTION BLOCK TAKEOUT
S-2002	IN 14A346. IN JUNCTION BLOCK TAKEOUT
S-2003	IN 14405 NEAR TAKEOUT TO TRAILER LAMP RELAYS

1973 MARK IV

PAGE 11 OF 13

LOCATIONS 145 THRU 160

7-1-72