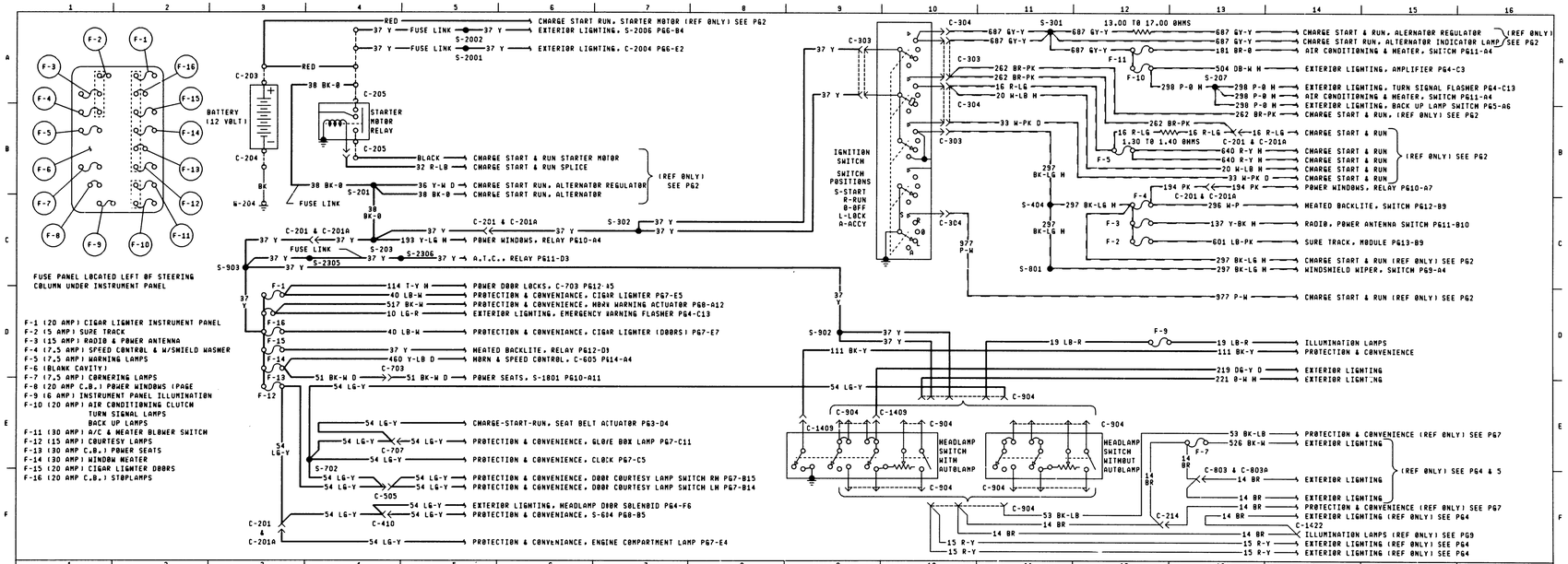
FUSE PANEL LOCATED LEFT OF STEERING COLUMN UNDER INSTRUMENT PANEL
F-1 (20 AMP) CIGAR LIGHTER INSTRUMENT PANEL
F-2 (5 AMP) SURE TRACK
F-3 (15 AMP) RADIO & POWER ANTENNA
F-4 (7.5 AMP) SPEED CONTROL & W/SWIELD WASHER
F-5 (7.5 AMP) WARNING LAMPS
F-6 (BLANK CAVITY)
F-7 (7.5 AMP) CORNERING LAMPS
F-8 (20 AMP C.B.) POWER WINDOWS (PAGE
F-9 (6 AMP) INSTRUMENT PANEL ILLUMINATION
F-10 (20 AMP) AIR CONDITIONING CLUTCH
TURN SIGNAL LAMPS
BACK UP LAMPS
F-11 (30 AMP) A/C & HEATER BLOWER SWITCH
F-12 (15 AMP) COURTESY LAMPS
F-13 (30 AMP C.B.) POWER SEATS
F-14 (30 AMP) WINDOW HEATER
F-15 (20 AMP) CIGAR LIGHTER DOORS
F-16 (20 AMP C.B.) STOPLAMPS
BATTERY (12 VOLT)
STARTER MOTOR RELAY
FUSE LINK
CHARGE START RUN. STARTER MOTOR (REF ONLY) SEE PG2
EXTERIOR LIGHTING. S-2006 PG6-B4
EXTERIOR LIGHTING. C-2004 PG6-E2
CHARGE START & RUN STARTER MOTOR
CHARGE START & RUN SPLICE
CHARGE START RUN. ALTERNATOR REGULATOR
CHARGE START RUN. ALTERNATOR
(REF ONLY) SEE PG2
POWER WINDOWS. RELAY PG10-A4
A.T.C.. RELAY PG11-D3
POWER DOOR LOCKS. C-703 PG12-A5
PROTECTION & CONVENIENCE. CIGAR LIGHTER PG7-E5
PROTECTION & CONVENIENCE. HORN WARNING ACTUATOR PG8-A12
EXTERIOR LIGHTING. EMERGENCY WARNING FLASHER PG4-C13
PROTECTION & CONVENIENCE. CIGAR LIGHTER (DOORS) PG7-E7
HEATED BACKLITE. RELAY PG12-D3
HORN & SPEED CONTROL. C-605 PG14-A4
POWER SEATS. S-1801 PG10-A11
CHARGE-START-RUN. SEAT BELT ACTUATOR PG3-D4
PROTECTION & CONVENIENCE. GLOVE BOX LAMP PG7-C11
PROTECTION & CONVENIENCE. CLOCK PG7-C5
PROTECTION & CONVENIENCE. DOOR COURTESY LAMP SWITCH RH PG7-B15
PROTECTION & CONVENIENCE. DOOR COURTESY LAMP SWITCH LH PG7-B14
EXTERIOR LIGHTING. HEADLAMP DOOR SOLENOID PG4-F6
PROTECTION & CONVENIENCE. S-614 PG8-B5
PROTECTION & CONVENIENCE. ENGINE COMPARTMENT LAMP PG7-E4
IGNITION SWITCH
SWITCH POSITIONS
S-START
R-RUN
O-OFF
L-LOCK
A-ACCY
13.00 TO 17.00 OHMS
1.30 TO 1.40 OHMS
CHARGE START & RUN. ALTERNATOR REGULATOR
CHARGE START RUN. ALTERNATOR INDICATOR LAMP
(REF ONLY) SEE PG2
AIR CONDITIONING & HEATER. SWITCH PG11-A4
EXTERIOR LIGHTING. AMPLIFIER PG4-C3
EXTERIOR LIGHTING. TURN SIGNAL FLASHER PG4-C13
AIR CONDITIONING & HEATER. SWITCH PG11-A4
EXTERIOR LIGHTING. BACK UP LAMP SWITCH PG5-A6
CHARGE START & RUN. (REF ONLY) SEE PG2
CHARGE START & RUN
POWER WINDOWS. RELAY PG10-A7
HEATED BACKLITE. SWITCH PG12-B9
RADIO. POWER ANTENNA SWITCH PG11-B10
SURE TRACK. MODULE PG13-B9
WINDSHIELD WIPER. SWITCH PG9-A4
ILLUMINATION LAMPS
PROTECTION & CONVENIENCE
EXTERIOR LIGHTING
HEADLAMP SWITCH WITH AUTOLAMP
HEADLAMP SWITCH WITHOUT AUTOLAMP
PROTECTION & CONVENIENCE (REF ONLY) SEE PG7
EXTERIOR LIGHTING
(REF ONLY) SEE PG4 & 5
EXTERIOR LIGHTING (REF ONLY) SEE PG4
ILLUMINATION LAMPS (REF ONLY) SEE PG9
EXTERIOR LIGHTING (REF ONLY) SEE PG4
EXTERIOR LIGHTING (REF ONLY) SEE PG4
C-410
L.H. TOE BOARD
C-505
L.H. SIDE UNDER I/P
C-703
LEFT OF STEERING COLUMN
C-201
DASH PANEL LEFT OF STEERING COLUMN BEHIND FUSE PANEL
C-201A
DASH PANEL LEFT OF STEERING COLUMN IN ENGINE COMPARTMENT
C-203
IN ENGINE COMPARTMENT, FORWARD R.H. CORNER
C-204
IN ENGINE COMPARTMENT, FORWARD R.H. CORNER
C-205
ON R.H. FENDER APRON
C-214
BEHIND I/P, L.H. SIDE
C-303
NEAR STEERING COLUMN
C-304
NEAR STEERING COLUMN
C-707
AT GLOVE BOX
* PART OF GLOVE BOX LAMP
C-803
DASH PANEL LEFT OF STEERING COLUMN BEHIND FUSE PANEL
C-803A
DASH PANEL, LEFT OF STEERING COLUMN, ENGINE COMPARTMENT SIDE
GROUND CODES
G-204 ON ENGINE RH SIDE
SPLICE CODES
S-201 IN 14398, NEAR TAKEOUT TO STARTING MOTOR RELAY
S-203 IN 14398, NEAR A/C RELAY TAKEOUT
S-207 IN 14401, NEAR RADIO TAKEOUT
S-301 IN 14401 NEAT TO IGNITION SWITCH TAKEOUT
S-302 IN 14401 NEAT TO IGNITION SWITCH TAKEOUT
S-404 IN 14401 L.H. SIDE UNDER INSTRUMENT PANEL
S-702 IN 14401 IN TAKEOUT TO I/P CLUSTER
S-801 IN 14401 IN TAKEOUT TO W/S WIPER SWITCH
S-902 IN 14401 IN TAKEOUT TO HEADLAMP SWITCH
S-903 IN 14401 NEAR TAKEOUT TO I/P CLUSTER
S-2001 IN 140346, NEAR TAKEOUT TO STARTING MOTOR RELAY
S-2002 IN 140346, NEAR TAKEOUT TO STARTING MOTOR RELAY
S-2305 IN 14398, NEAR T/O TO RELAY
S-2306 IN 14398, NEAR T/O TO RELAY
ELECTRICAL SYSTEMS 1975 MARK IV
POWER DISTRIBUTION
DATE 7-18-74
C-904
HEADLAMP SWITCH
BEHIND INSTRUMENT PANEL FAR LEFT SIDE AT HEADLAMP SWITCH
C-1409
HEADLAMP SWITCH
AT BACK OF HEADLAMP SWITCH
C-1422
BEHIND I/P CIGAR LIGHTER